Signa Ovation System Interconnect - 0.35T (FIXED SITE)

1. CUSTOMER FURNISHED
2. TYPICAL CONNECTION FOR NORMALLY CLOSED EMERGENCY OFF SWITCH
3. MDP, EO1/E02 and RUN #296/#297 are used only high voltage.(over 380V)
4. RUN #1009 is connected to MDP, if exist.
5. OPTIONAL: MAY NOT BE PRESENT ON ALL SYSTEMS
6. CUSTOMER SUPPLIED TELEPHONE LINE FOR INSITE MODEM

*** Denotes a newly assigned run number for HFO

**** Denotes a newly assigned run number for MFO

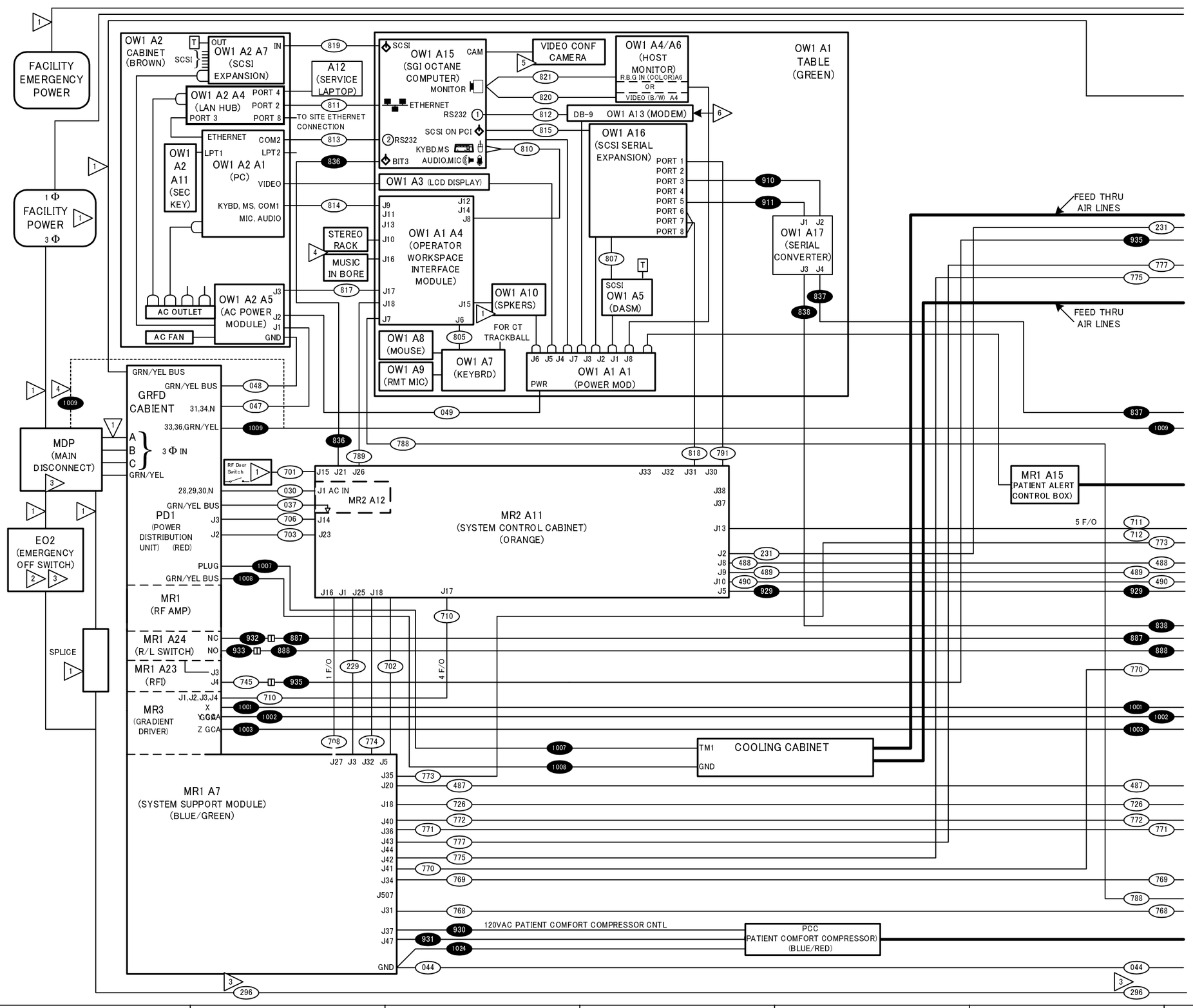

Report updates for this diagram to Y.Kato at Tel. +81-42-585-5191

	Signa Ovation			
	Interconnect Diagram, MFO			
	SIZE A3	DATE 23 May 01	DWG NO 2276625SCH	REV 0
Y.Kato	SCALE NTS		SHEET 1 of 2	