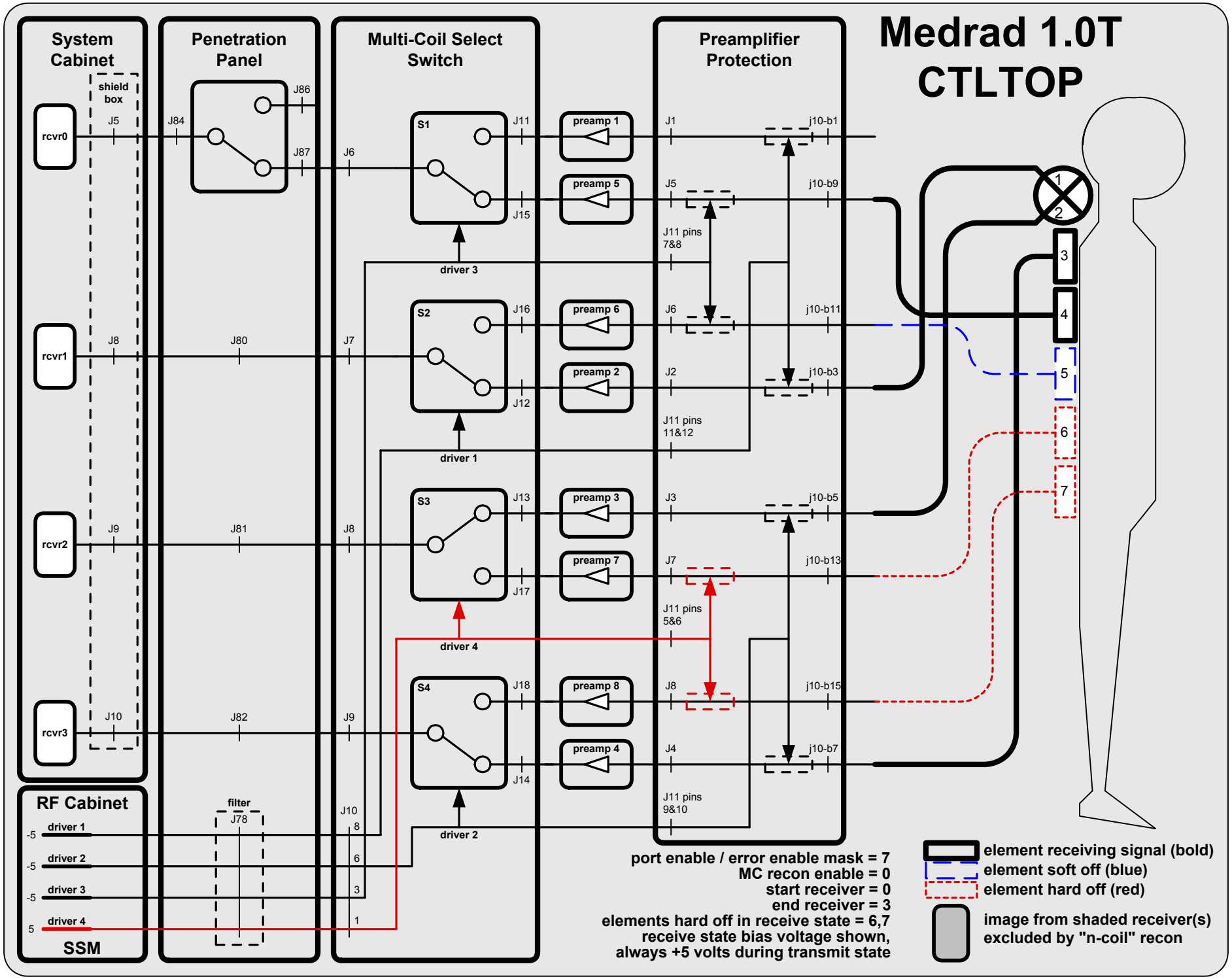
Medrad 1.0T
CTLTOP
System Cabinet
shield box
rcvr0
rcvr1
rcvr2
rcvr3
J5
J8
J9
J10
Penetration Panel
J84
J86
J87
J80
J81
J82
Multi-Coil Select Switch
J6
J7
J8
J9
S1
S2
S3
S4
J11
J15
J16
J12
J13
J17
J18
J14
driver 1
driver 2
driver 3
driver 4
preamp 1
preamp 5
preamp 6
preamp 2
preamp 3
preamp 7
preamp 8
preamp 4
Preamplifier Protection
J1
J5
J6
J2
J3
J7
J8
J4
J11 pins 7&8
J11 pins 11&12
J11 pins 5&6
J11 pins 9&10
j10-b1
j10-b9
j10-b11
j10-b3
j10-b5
j10-b13
j10-b15
j10-b7
RF Cabinet
driver 1
driver 2
driver 3
driver 4
-5
-5
-5
5
SSM
filter
J78
J10
8
6
3
1
1
2
3
4
5
6
7
port enable / error enable mask = 7
MC recon enable = 0
start receiver = 0
end receiver = 3
elements hard off in receive state = 6,7
receive state bias voltage shown,
always +5 volts during transmit state
element receiving signal (bold)
element soft off (blue)
element hard off (red)
image from shaded receiver(s)
excluded by "n-coil" recon

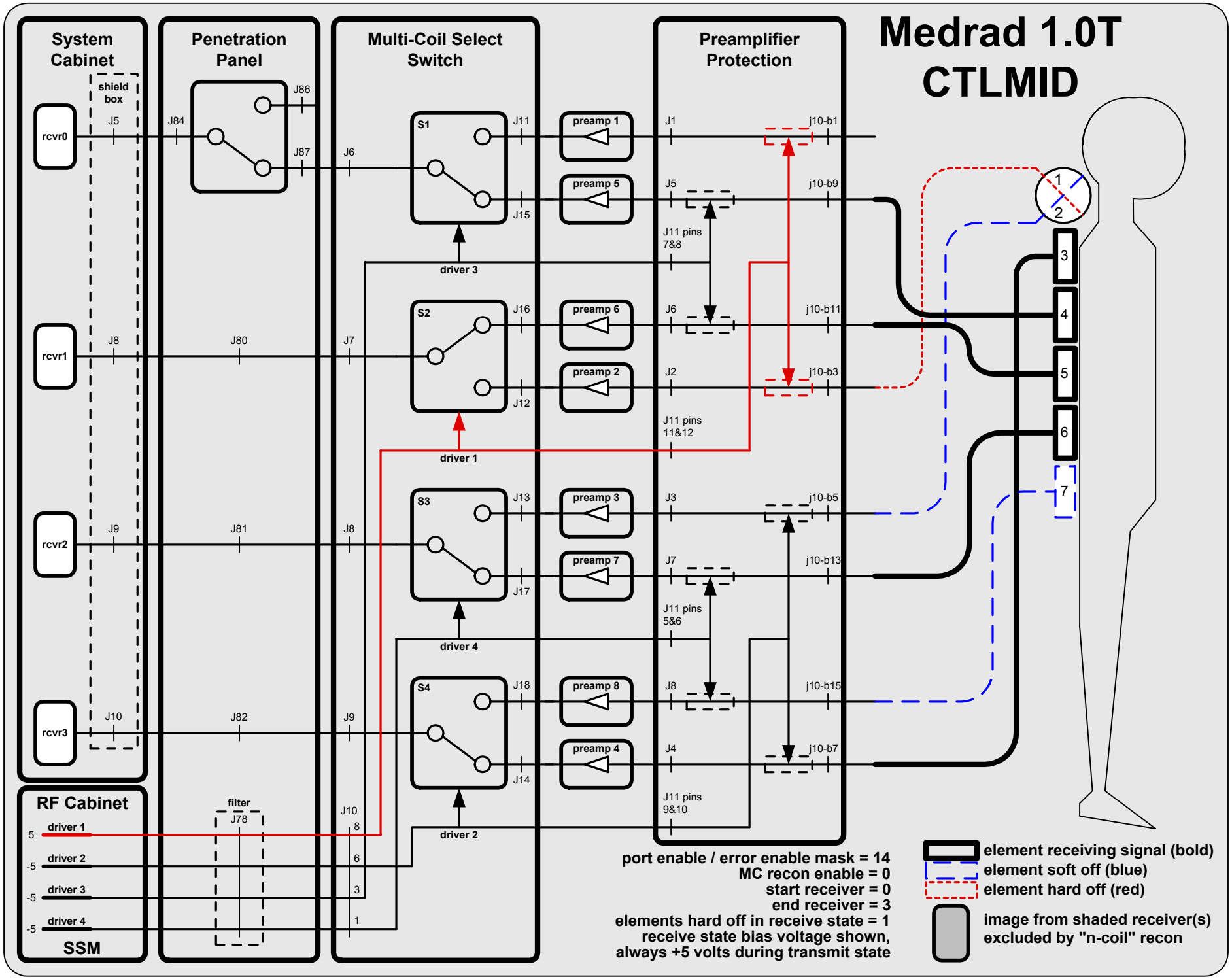
Medrad 1.0T
CTLMID
System Cabinet
shield box
rcvr0
rcvr1
rcvr2
rcvr3
J5
J8
J9
J10
Penetration Panel
J84
J86
J87
J80
J81
J82
Multi-Coil Select Switch
J6
J7
J8
J9
S1
S2
S3
S4
J11
J15
J16
J12
J13
J17
J18
J14
driver 1
driver 2
driver 3
driver 4
preamp 1
preamp 5
preamp 6
preamp 2
preamp 3
preamp 7
preamp 8
preamp 4
Preamplifier Protection
J1
J5
J6
J2
J3
J7
J8
J4
J11 pins 7&8
J11 pins 11&12
J11 pins 5&6
J11 pins 9&10
j10-b1
j10-b9
j10-b11
j10-b3
j10-b5
j10-b13
j10-b15
j10-b7
1
2
3
4
5
6
7
RF Cabinet
driver 1
driver 2
driver 3
driver 4
5
-5
-5
-5
SSM
filter
J78
J10
8
6
3
1
port enable / error enable mask = 14
MC recon enable = 0
start receiver = 0
end receiver = 3
elements hard off in receive state = 1
receive state bias voltage shown,
always +5 volts during transmit state
element receiving signal (bold)
element soft off (blue)
element hard off (red)
image from shaded receiver(s)
excluded by "n-coil" recon

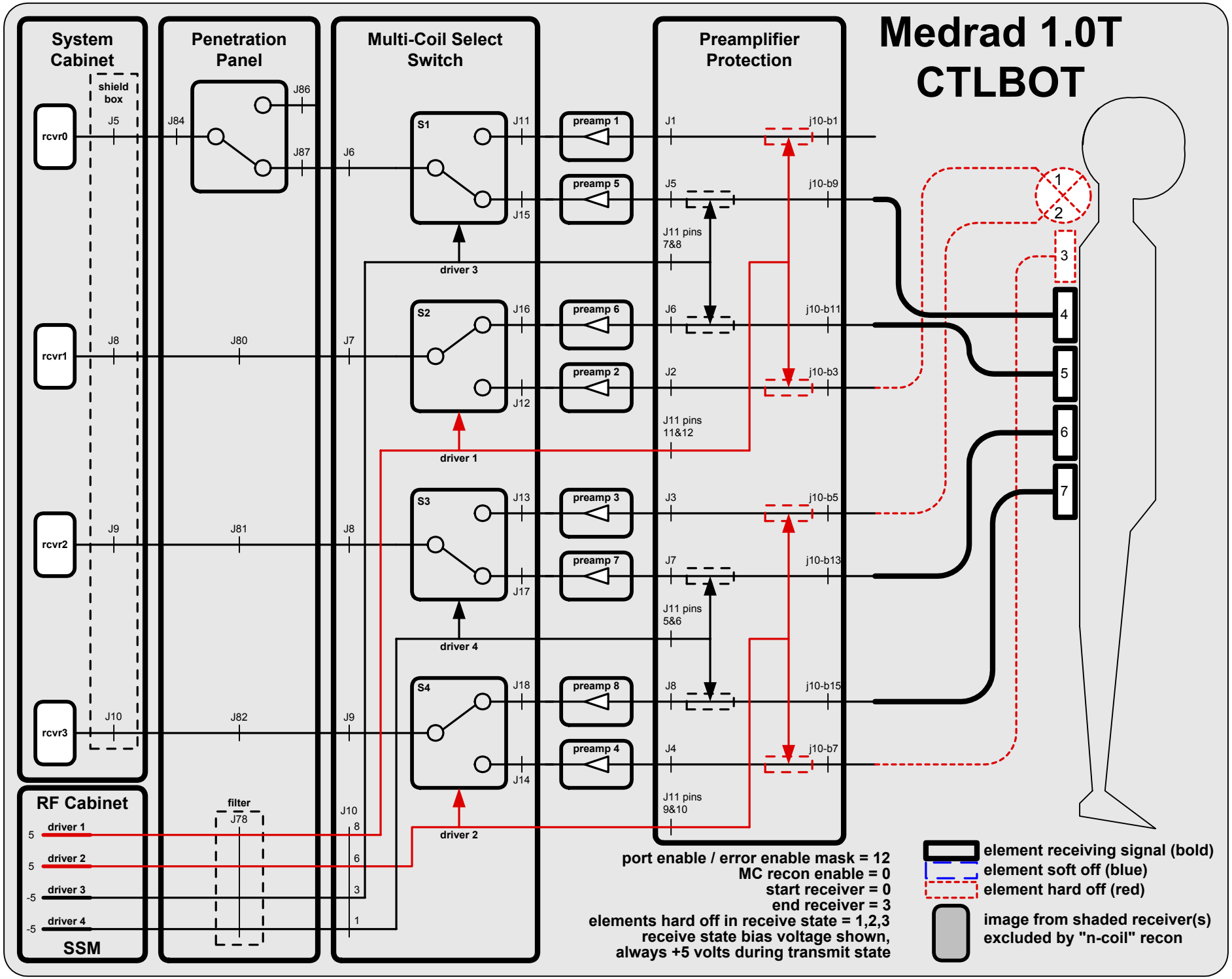
Medrad 1.0T
CTLBOT
System Cabinet
shield box
rcvr0
rcvr1
rcvr2
rcvr3
J5
J8
J9
J10
Penetration Panel
J84
J86
J87
J80
J81
J82
Multi-Coil Select Switch
J6
J7
J8
J9
S1
S2
S3
S4
J11
J15
J16
J12
J13
J17
J18
J14
driver 1
driver 2
driver 3
driver 4
preamp 1
preamp 5
preamp 6
preamp 2
preamp 3
preamp 7
preamp 8
preamp 4
Preamplifier Protection
J1
J5
J6
J2
J3
J7
J8
J4
j10-b1
j10-b9
j10-b11
j10-b3
j10-b5
j10-b13
j10-b15
j10-b7
J11 pins 7&8
J11 pins 11&12
J11 pins 5&6
J11 pins 9&10
RF Cabinet
driver 1
driver 2
driver 3
driver 4
5
5
-5
-5
SSM
filter
J78
J10
8
6
3
1
1
2
3
4
5
6
7
port enable / error enable mask = 12
MC recon enable = 0
start receiver = 0
end receiver = 3
elements hard off in receive state = 1,2,3
receive state bias voltage shown,
always +5 volts during transmit state
element receiving signal (bold)
element soft off (blue)
element hard off (red)
image from shaded receiver(s)
excluded by "n-coil" recon

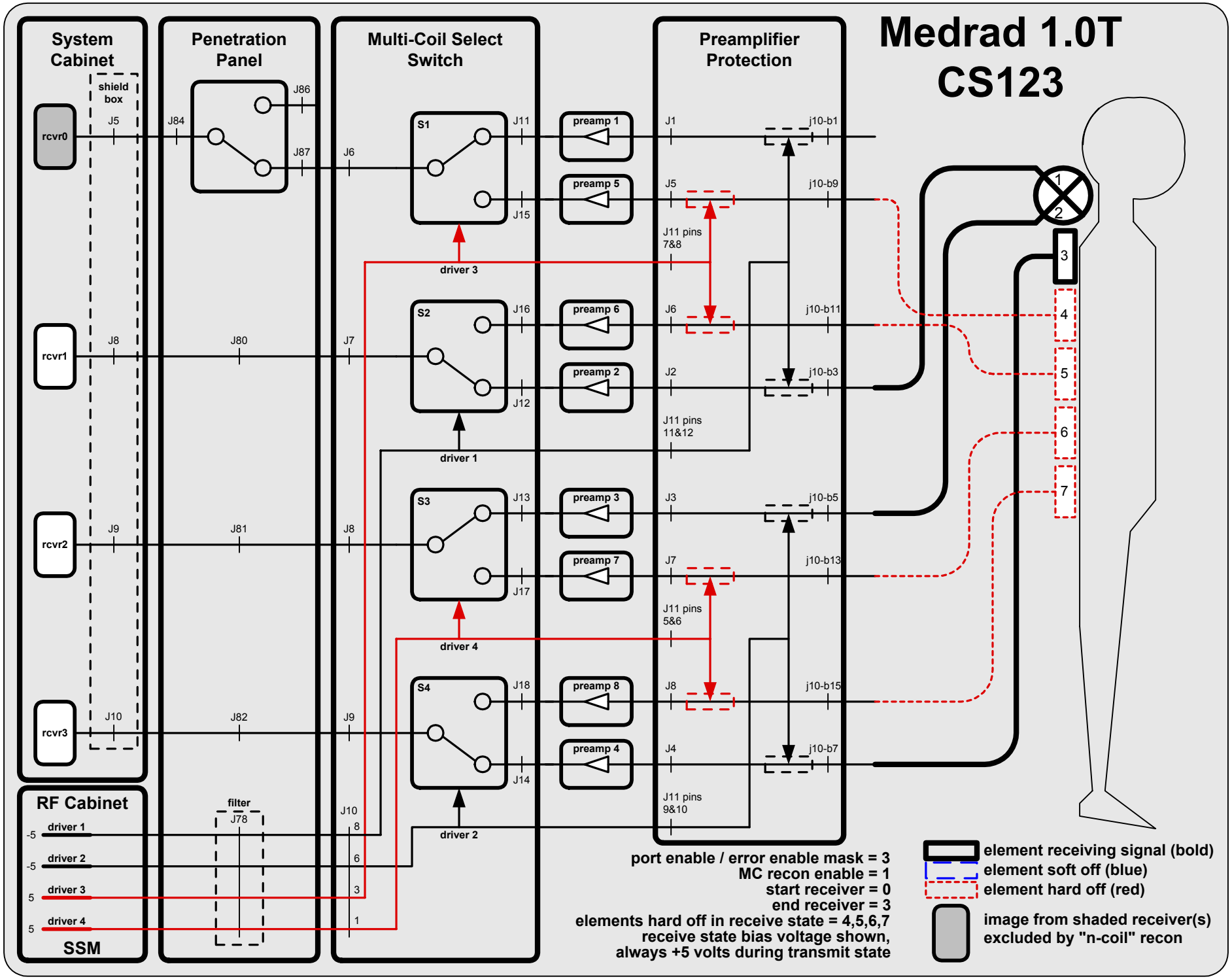
Medrad 1.0T
CS123
System Cabinet
shield box
rcvr0
rcvr1
rcvr2
rcvr3
J5
J8
J9
J10
Penetration Panel
J84
J86
J87
J80
J81
J82
Multi-Coil Select Switch
J6
J7
J8
J9
S1
S2
S3
S4
J11
J15
J16
J12
J13
J17
J18
J14
driver 1
driver 2
driver 3
driver 4
preamp 1
preamp 5
preamp 6
preamp 2
preamp 3
preamp 7
preamp 8
preamp 4
Preamplifier Protection
J1
J5
J6
J2
J3
J7
J8
J4
j10-b1
j10-b9
j10-b11
j10-b3
j10-b5
j10-b13
j10-b15
j10-b7
J11 pins 7&8
J11 pins 11&12
J11 pins 5&6
J11 pins 9&10
RF Cabinet
-5 driver 1
-5 driver 2
5 driver 3
5 driver 4
SSM
filter
J78
J10
8
6
3
1
port enable / error enable mask = 3
MC recon enable = 1
start receiver = 0
end receiver = 3
elements hard off in receive state = 4,5,6,7
receive state bias voltage shown,
always +5 volts during transmit state
element receiving signal (bold)
element soft off (blue)
element hard off (red)
image from shaded receiver(s)
excluded by "n-coil" recon
1
2
3
4
5
6
7

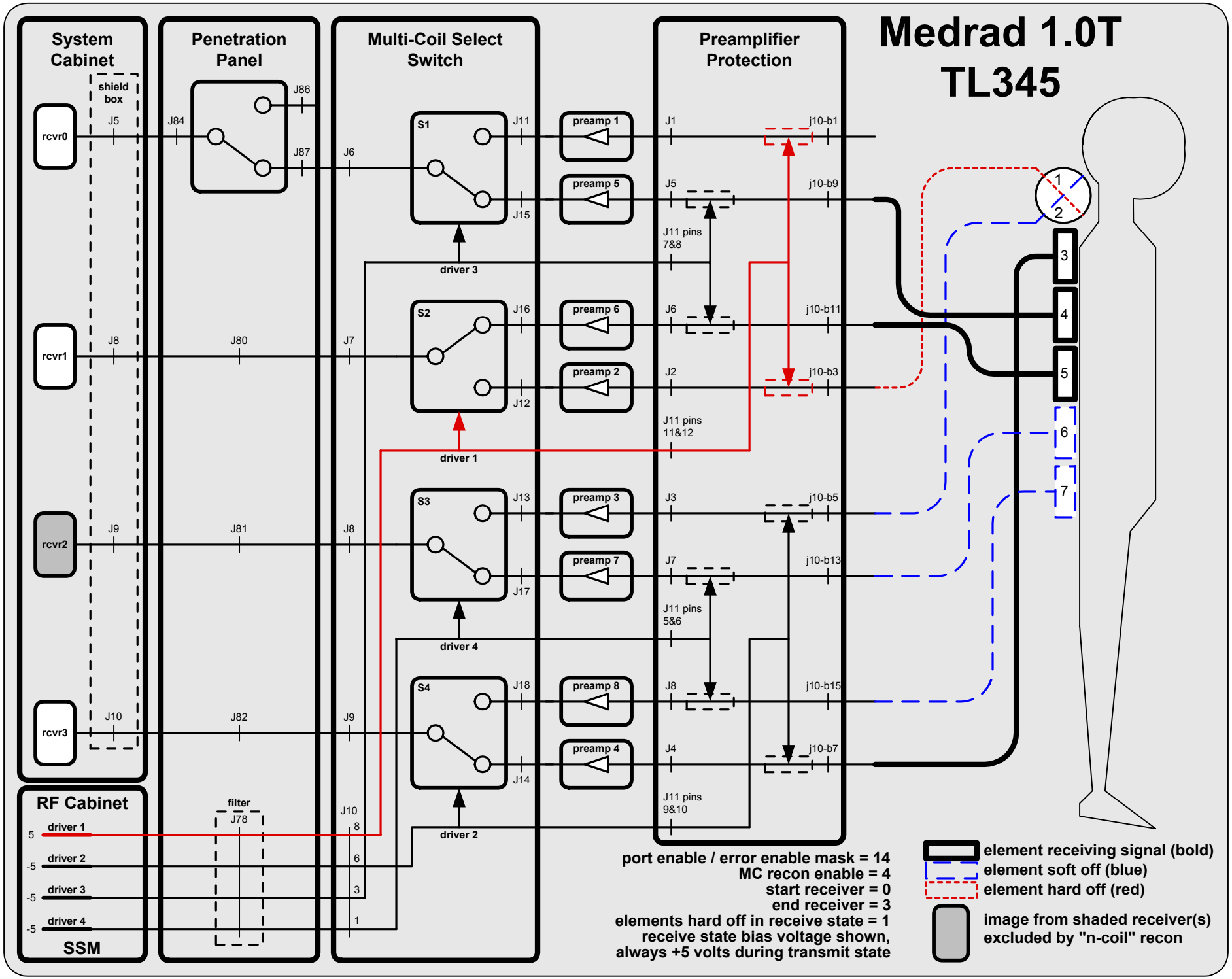
Medrad 1.0T
TL345
System Cabinet
shield box
rcvr0
rcvr1
rcvr2
rcvr3
J5
J8
J9
J10
Penetration Panel
J84
J86
J87
J80
J81
J82
Multi-Coil Select Switch
J6
J7
J8
J9
S1
S2
S3
S4
J11
J15
J16
J12
J13
J17
J18
J14
driver 1
driver 2
driver 3
driver 4
preamp 1
preamp 5
preamp 6
preamp 2
preamp 3
preamp 7
preamp 8
preamp 4
Preamplifier Protection
J1
J5
J6
J2
J3
J7
J8
J4
j10-b1
j10-b9
j10-b11
j10-b3
j10-b5
j10-b13
j10-b15
j10-b7
J11 pins 7&8
J11 pins 11&12
J11 pins 5&6
J11 pins 9&10
RF Cabinet
filter
J78
J10
8
6
3
1
5
-5
-5
-5
SSM
1
2
3
4
5
6
7
port enable / error enable mask = 14
MC recon enable = 4
start receiver = 0
end receiver = 3
elements hard off in receive state = 1
receive state bias voltage shown,
always +5 volts during transmit state
element receiving signal (bold)
element soft off (blue)
element hard off (red)
image from shaded receiver(s)
excluded by "n-coil" recon

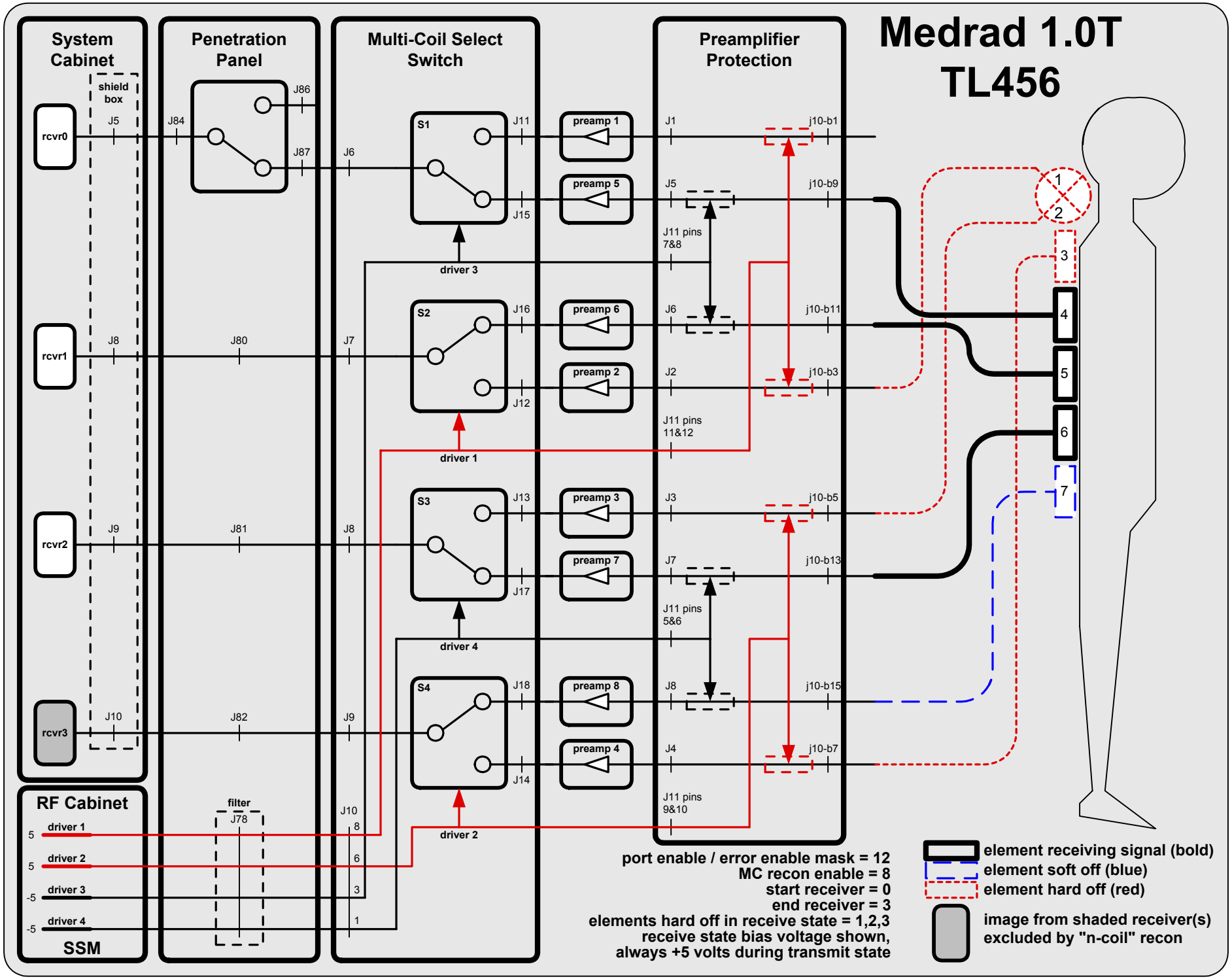
Medrad 1.0T
TL456
System Cabinet
shield box
rcvr0
rcvr1
rcvr2
rcvr3
Penetration Panel
Multi-Coil Select Switch
Preamplifier Protection
S1
S2
S3
S4
preamp 1
preamp 5
preamp 6
preamp 2
preamp 3
preamp 7
preamp 8
preamp 4
J5
J8
J9
J10
J84
J86
J87
J80
J81
J82
J6
J7
J8
J9
J11
J15
J16
J12
J13
J17
J18
J14
J1
J5
J6
J2
J3
J7
J8
J4
j10-b1
j10-b9
j10-b11
j10-b3
j10-b5
j10-b13
j10-b15
j10-b7
J11 pins 7&8
J11 pins 11&12
J11 pins 5&6
J11 pins 9&10
driver 3
driver 1
driver 4
driver 2
RF Cabinet
filter
J78
J10
5
driver 1
5
driver 2
-5
driver 3
-5
driver 4
8
6
3
1
SSM
1
2
3
4
5
6
7
port enable / error enable mask = 12
MC recon enable = 8
start receiver = 0
end receiver = 3
elements hard off in receive state = 1,2,3
receive state bias voltage shown,
always +5 volts during transmit state
element receiving signal (bold)
element soft off (blue)
element hard off (red)
image from shaded receiver(s)
excluded by "n-coil" recon

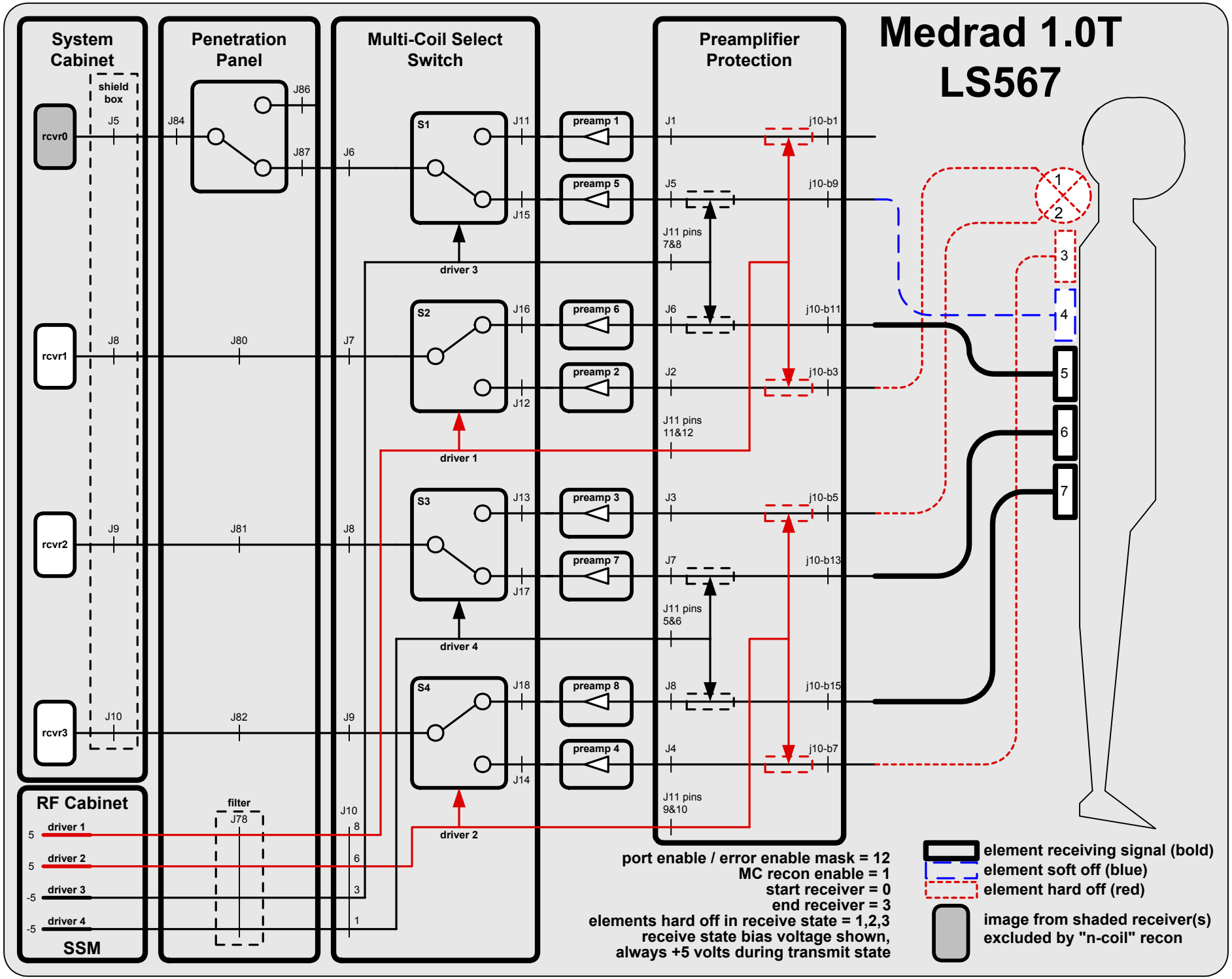
Medrad 1.0T
LS567
System Cabinet
shield box
rcvr0
rcvr1
rcvr2
rcvr3
J5
J8
J9
J10
Penetration Panel
J84
J86
J87
J80
J81
J82
Multi-Coil Select Switch
J6
J7
J8
J9
S1
S2
S3
S4
J11
J15
J16
J12
J13
J17
J18
J14
driver 1
driver 2
driver 3
driver 4
preamp 1
preamp 5
preamp 6
preamp 2
preamp 3
preamp 7
preamp 8
preamp 4
Preamplifier Protection
J1
J5
J6
J2
J3
J7
J8
J4
J11 pins 7&8
J11 pins 11&12
J11 pins 5&6
J11 pins 9&10
j10-b1
j10-b9
j10-b11
j10-b3
j10-b5
j10-b13
j10-b15
j10-b7
1
2
3
4
5
6
7
RF Cabinet
filter
J78
J10
8
6
3
1
5
driver 1
5
driver 2
-5
driver 3
-5
driver 4
SSM
port enable / error enable mask = 12
MC recon enable = 1
start receiver = 0
end receiver = 3
elements hard off in receive state = 1,2,3
receive state bias voltage shown,
always +5 volts during transmit state
element receiving signal (bold)
element soft off (blue)
element hard off (red)
image from shaded receiver(s)
excluded by "n-coil" recon

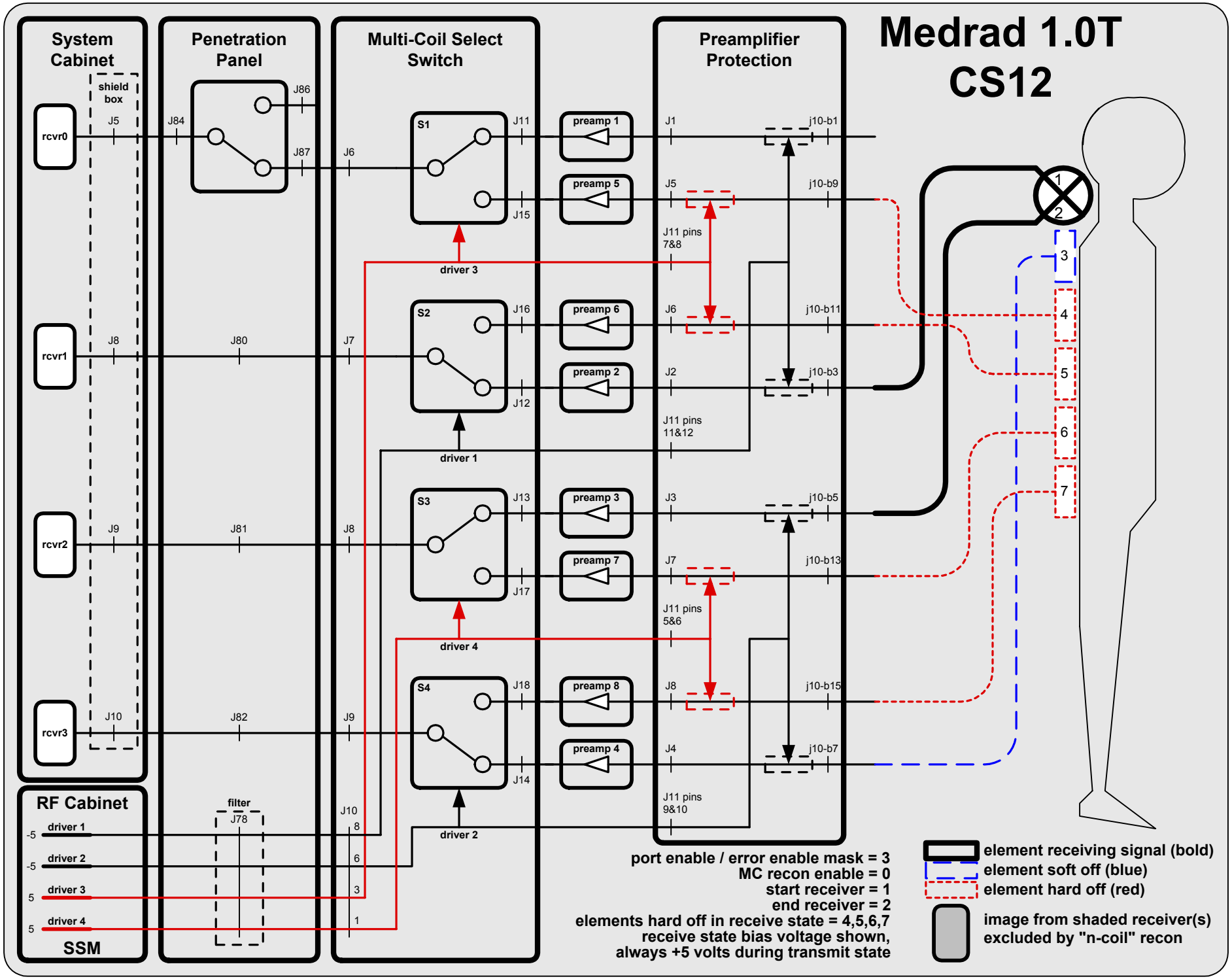
Medrad 1.0T
CS12
System Cabinet
shield box
rcvr0
rcvr1
rcvr2
rcvr3
J5
J8
J9
J10
Penetration Panel
J84
J86
J87
J80
J81
J82
Multi-Coil Select Switch
J6
J7
J8
J9
S1
S2
S3
S4
J11
J15
J16
J12
J13
J17
J18
J14
driver 1
driver 2
driver 3
driver 4
preamp 1
preamp 5
preamp 6
preamp 2
preamp 3
preamp 7
preamp 8
preamp 4
Preamplifier Protection
J1
J5
J6
J2
J3
J7
J8
J4
J11 pins 7&8
J11 pins 11&12
J11 pins 5&6
J11 pins 9&10
j10-b1
j10-b9
j10-b11
j10-b3
j10-b5
j10-b13
j10-b15
j10-b7
1
2
3
4
5
6
7
RF Cabinet
driver 1
driver 2
driver 3
driver 4
-5
-5
5
5
SSM
filter
J78
J10
8
6
3
1
port enable / error enable mask = 3
MC recon enable = 0
start receiver = 1
end receiver = 2
elements hard off in receive state = 4,5,6,7
receive state bias voltage shown,
always +5 volts during transmit state
element receiving signal (bold)
element soft off (blue)
element hard off (red)
image from shaded receiver(s)
excluded by "n-coil" recon

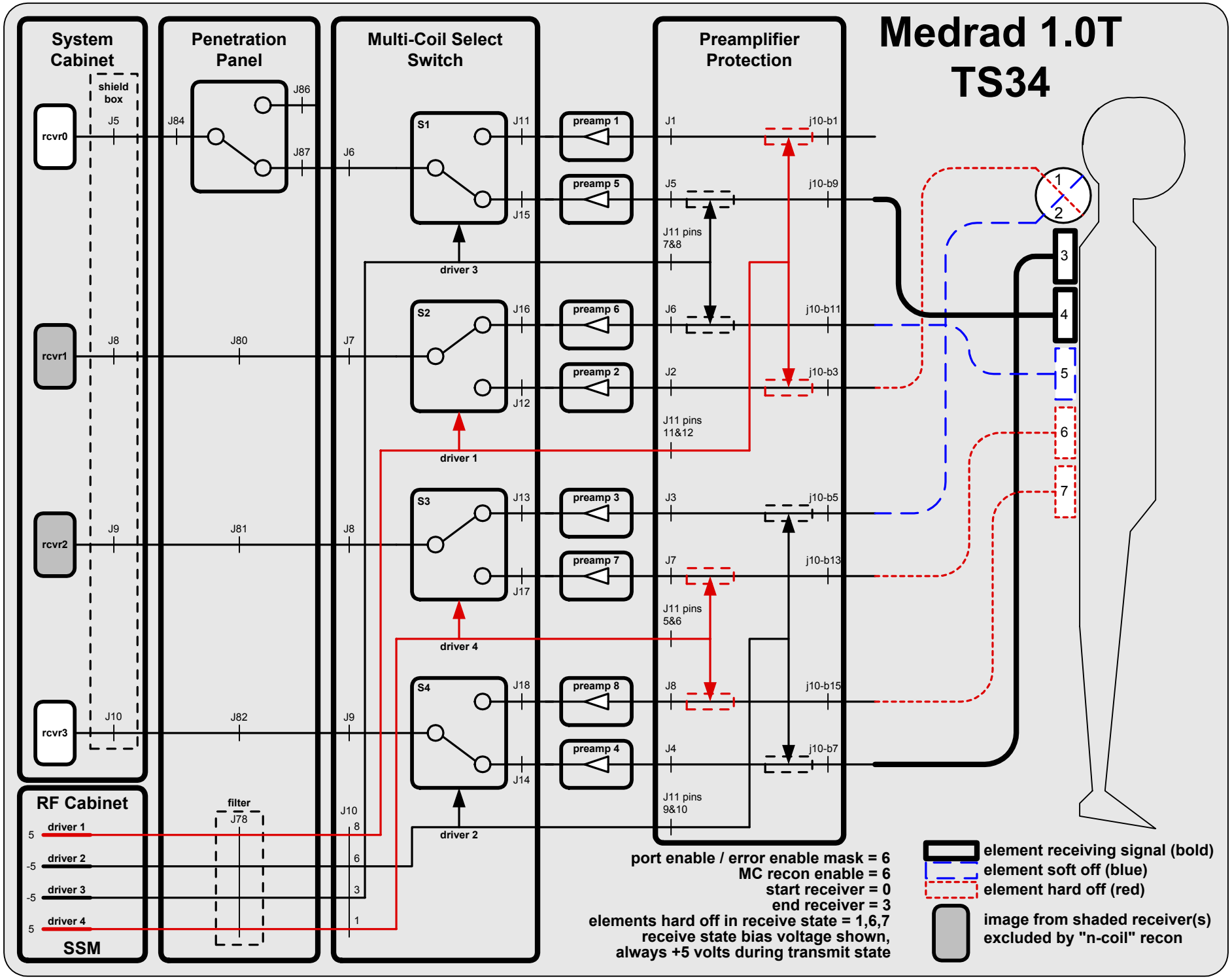
Medrad 1.0T
TS34
System Cabinet
shield box
rcvr0
rcvr1
rcvr2
rcvr3
J5
J8
J9
J10
Penetration Panel
J84
J86
J87
J80
J81
J82
Multi-Coil Select Switch
J6
J7
J8
J9
S1
S2
S3
S4
J11
J15
J16
J12
J13
J17
J18
J14
driver 1
driver 2
driver 3
driver 4
preamp 1
preamp 5
preamp 6
preamp 2
preamp 3
preamp 7
preamp 8
preamp 4
Preamplifier Protection
J1
J5
J6
J2
J3
J7
J8
J4
j10-b1
j10-b9
j10-b11
j10-b3
j10-b5
j10-b13
j10-b15
j10-b7
J11 pins 7&8
J11 pins 11&12
J11 pins 5&6
J11 pins 9&10
RF Cabinet
driver 1
driver 2
driver 3
driver 4
5
-5
-5
5
SSM
filter
J78
J10
8
6
3
1
port enable / error enable mask = 6
MC recon enable = 6
start receiver = 0
end receiver = 3
elements hard off in receive state = 1,6,7
receive state bias voltage shown,
always +5 volts during transmit state
element receiving signal (bold)
element soft off (blue)
element hard off (red)
image from shaded receiver(s)
excluded by "n-coil" recon
1
2
3
4
5
6
7

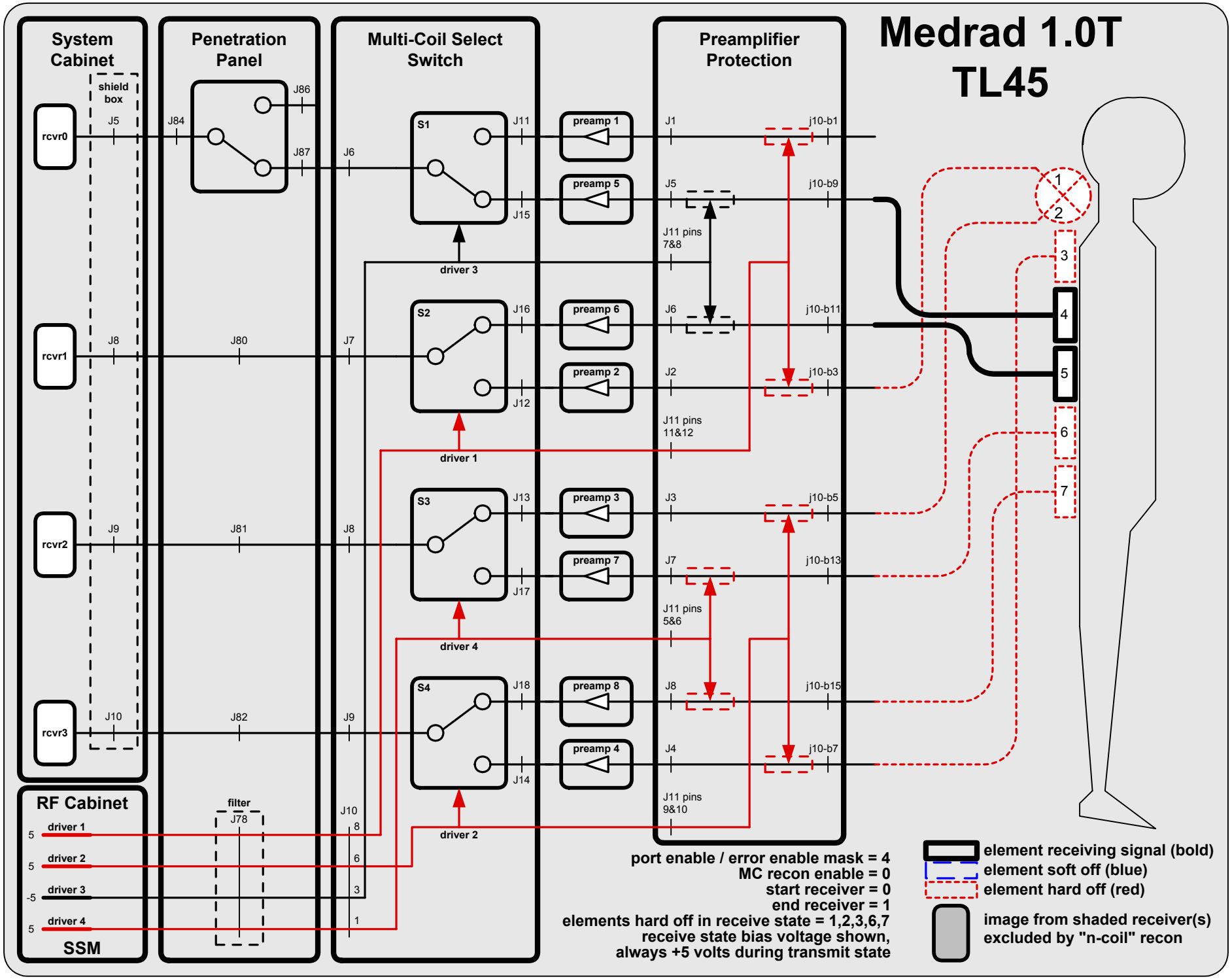
Medrad 1.0T
TL45
System Cabinet
shield box
rcvr0
rcvr1
rcvr2
rcvr3
J5
J8
J9
J10
Penetration Panel
J84
J86
J87
J80
J81
J82
Multi-Coil Select Switch
J6
J7
J8
J9
S1
S2
S3
S4
J11
J15
J16
J12
J13
J17
J18
J14
driver 1
driver 2
driver 3
driver 4
preamp 1
preamp 5
preamp 6
preamp 2
preamp 3
preamp 7
preamp 8
preamp 4
Preamplifier Protection
J1
J5
J6
J2
J3
J7
J8
J4
j10-b1
j10-b9
j10-b11
j10-b3
j10-b5
j10-b13
j10-b15
j10-b7
J11 pins 7&8
J11 pins 11&12
J11 pins 5&6
J11 pins 9&10
1
2
3
4
5
6
7
RF Cabinet
driver 1
driver 2
driver 3
driver 4
5
5
-5
5
SSM
filter
J78
J10
8
6
3
1
port enable / error enable mask = 4
MC recon enable = 0
start receiver = 0
end receiver = 1
elements hard off in receive state = 1,2,3,6,7
receive state bias voltage shown,
always +5 volts during transmit state
element receiving signal (bold)
element soft off (blue)
element hard off (red)
image from shaded receiver(s)
excluded by "n-coil" recon

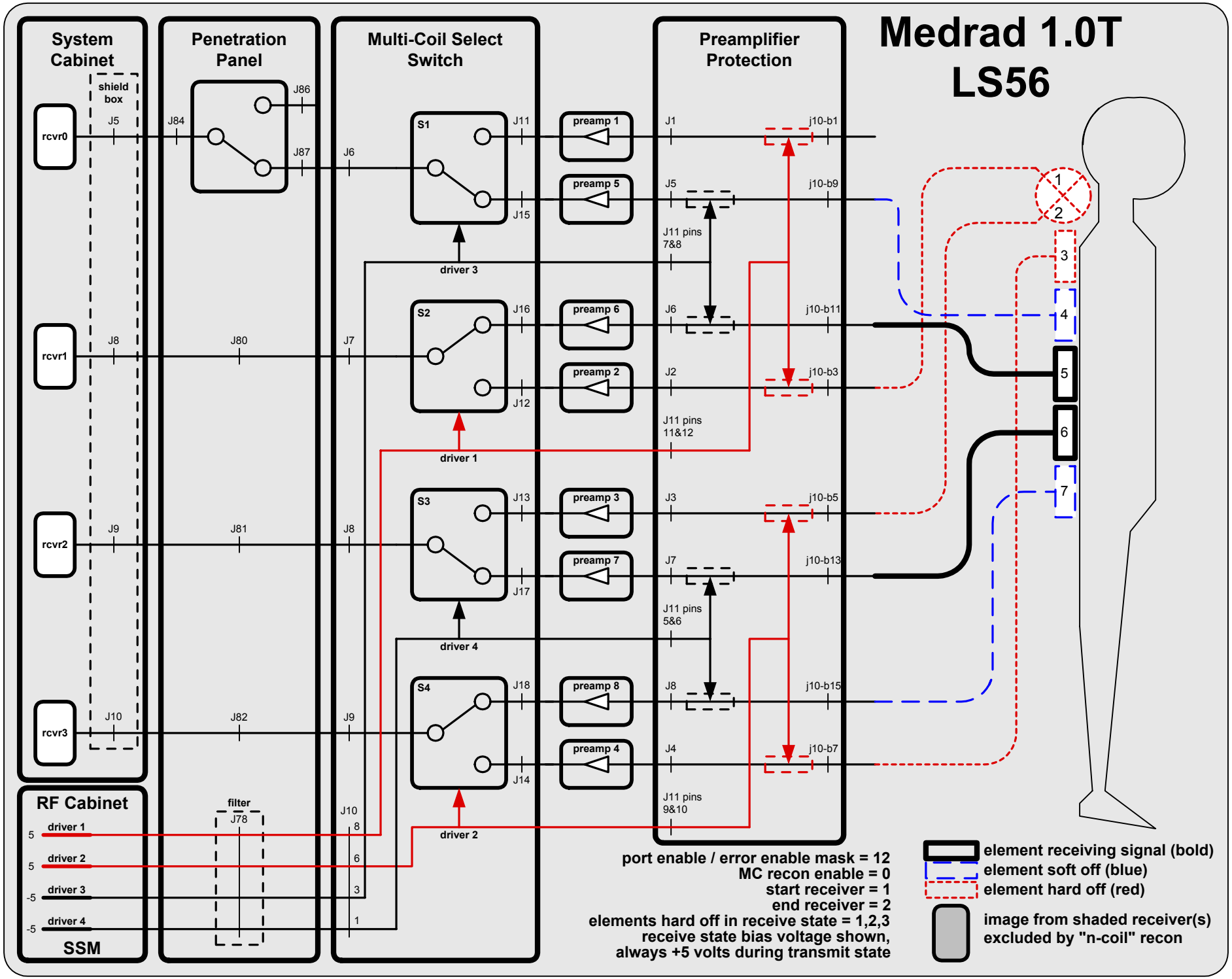
Medrad 1.0T
LS56
System Cabinet
shield box
rcvr0
rcvr1
rcvr2
rcvr3
J5
J8
J9
J10
Penetration Panel
J84
J86
J87
J80
J81
J82
Multi-Coil Select Switch
J6
J7
J8
J9
S1
S2
S3
S4
J11
J15
J16
J12
J13
J17
J18
J14
driver 1
driver 2
driver 3
driver 4
preamp 1
preamp 5
preamp 6
preamp 2
preamp 3
preamp 7
preamp 8
preamp 4
Preamplifier Protection
J1
J5
J6
J2
J3
J7
J8
J4
J11 pins 7&8
J11 pins 11&12
J11 pins 5&6
J11 pins 9&10
j10-b1
j10-b9
j10-b11
j10-b3
j10-b5
j10-b13
j10-b15
j10-b7
RF Cabinet
filter
J78
J10
8
6
3
1
5
driver 1
5
driver 2
-5
driver 3
-5
driver 4
SSM
1
2
3
4
5
6
7
port enable / error enable mask = 12
MC recon enable = 0
start receiver = 1
end receiver = 2
elements hard off in receive state = 1,2,3
receive state bias voltage shown,
always +5 volts during transmit state
element receiving signal (bold)
element soft off (blue)
element hard off (red)
image from shaded receiver(s)
excluded by "n-coil" recon

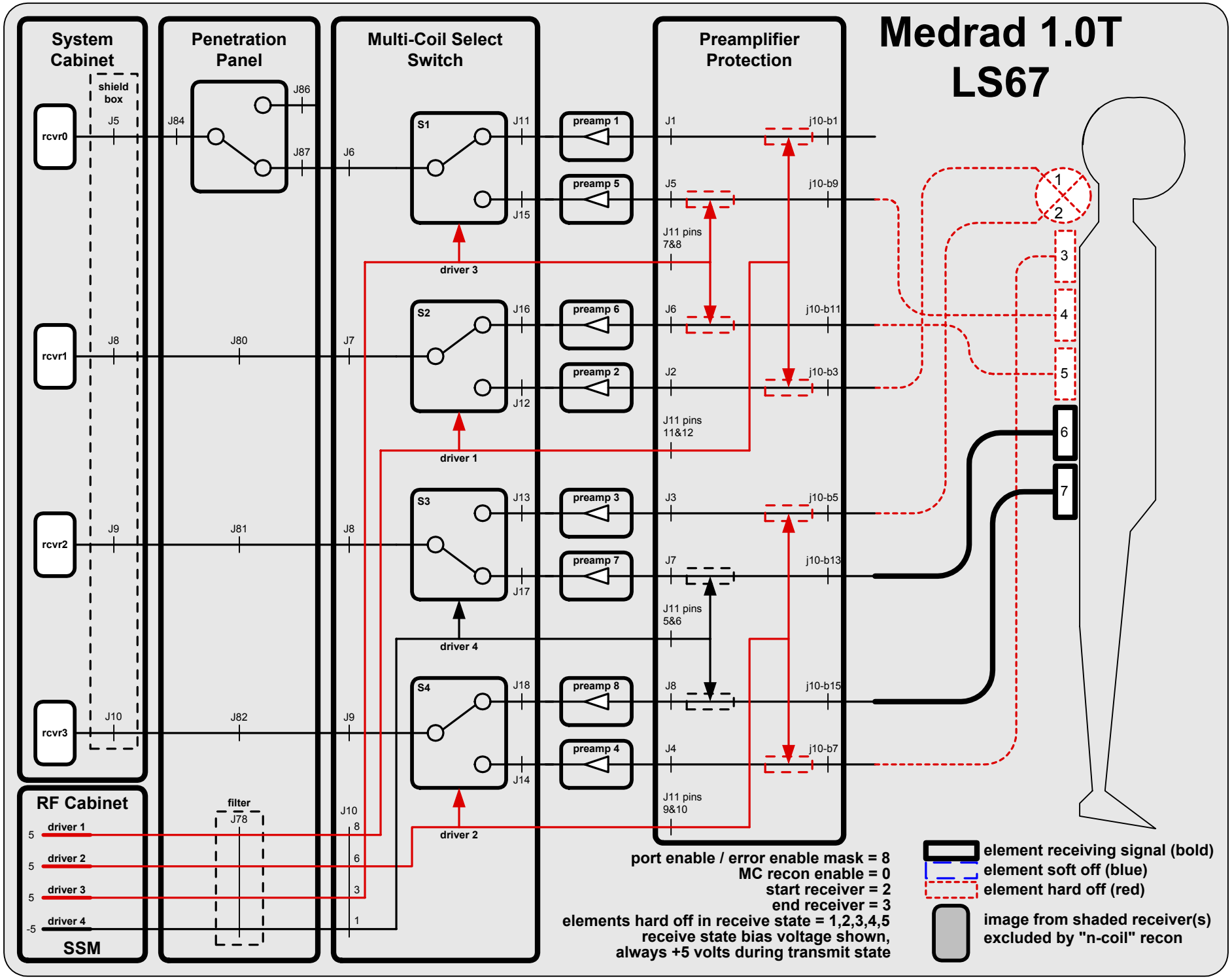
Medrad 1.0T
LS67
System Cabinet
shield box
rcvr0
rcvr1
rcvr2
rcvr3
J5
J8
J9
J10
Penetration Panel
J84
J86
J87
J80
J81
J82
Multi-Coil Select Switch
J6
J7
J8
J9
S1
S2
S3
S4
J11
J15
J16
J12
J13
J17
J18
J14
driver 1
driver 2
driver 3
driver 4
preamp 1
preamp 5
preamp 6
preamp 2
preamp 3
preamp 7
preamp 8
preamp 4
Preamplifier Protection
J1
J5
J6
J2
J3
J7
J8
J4
j10-b1
j10-b9
j10-b11
j10-b3
j10-b5
j10-b13
j10-b15
j10-b7
J11 pins 7&8
J11 pins 11&12
J11 pins 5&6
J11 pins 9&10
RF Cabinet
filter
J78
J10
8
6
3
1
5
driver 1
5
driver 2
5
driver 3
-5
driver 4
SSM
1
2
3
4
5
6
7
port enable / error enable mask = 8
MC recon enable = 0
start receiver = 2
end receiver = 3
elements hard off in receive state = 1,2,3,4,5
receive state bias voltage shown,
always +5 volts during transmit state
element receiving signal (bold)
element soft off (blue)
element hard off (red)
image from shaded receiver(s)
excluded by "n-coil" recon